SOCKOLET DIMENSIONS

Sockolet class 3000 “Size on Size”

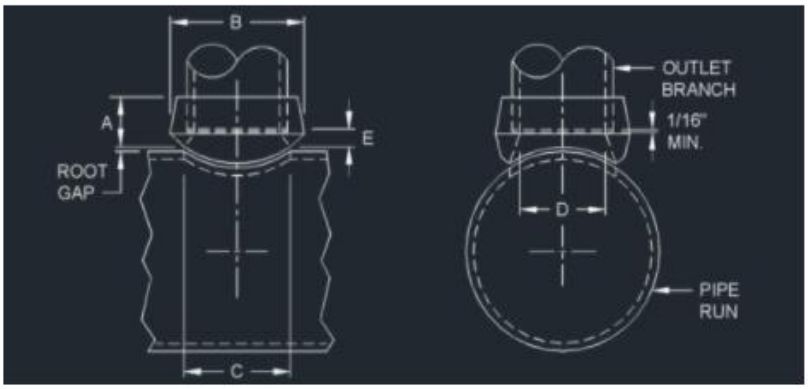

Outlet Size (NPT)	A	B	C	D	E	Approx. Weight (lb)
1/2	1	1 3/8	15/16	0.622	17/32	0.15
3/4	1 1/16	1 5/8	1 3/16	0.824	15/32	0.25
1	1 5/16	2	1 7/16	1.049	23/32	0.45
1 1/4	1 5/16	2 3/8	1 3/4	1.380	9/16 0.65	

1 1/2	1 3/8	2 7/8	2	1.610	21/32	0.85
2	1 1/2	3 1/2	2 9/16	2.067	15/16	1.40
2 1/2	1 9/16	4 1/16	3	2.469	3/4	2.25
3	1 3/4	4 13/16	3 11/16	3.068	15/16	3.75
3 1/2	1 11/16	5 3/8	4 7/16	3.548	11/16	4.30
4	1 7/8	6 1/16	4 3/4	4.026	1 1/16	6.60
5	2 7/16	7 1/4	5 1/4	5.047	1	9.00
6	2 11/16	8 11/16	6 1/16	6.065	1 3/16	15.50

Notes:

- Class 3000 to be used with schedule 80 pipes
- Dimensions and tolerances in accordance with ASME B16.11 and MSS SP-97
- Flat sockolets are used on welding caps, elliptical heads and flat surfaces
- Each outlet size is available to fit any run curvature.

Sockolet class 6000 "Size on Size"

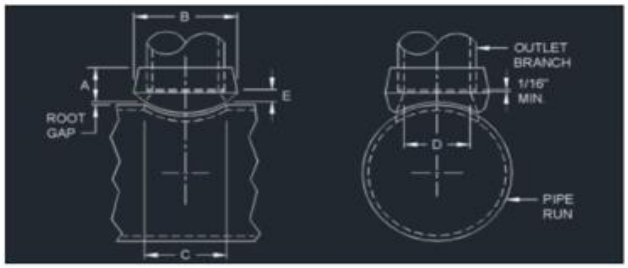

Outlet Size (NPS)	A	B	C	D	E	Approx. Weight (lb)
1/2	1 1/4	1 23/32	3/4	0.466	7/8	0.50
3/4	1 7/16	1 61/64	1	0.614	7/8	0.80
1	1 9/16	2 7/16	1 5/16	0.815	15/16	1.30
1 1/4	1 5/8	2 23/32	1 1/2	1.160	13/16	1.60
1 1/2	1 11/16	3 1/4	1 15/16	1.338	7/8	2.00
2	2 1/16	4 1/32	2 3/4	1.689	1 3/16	5.15